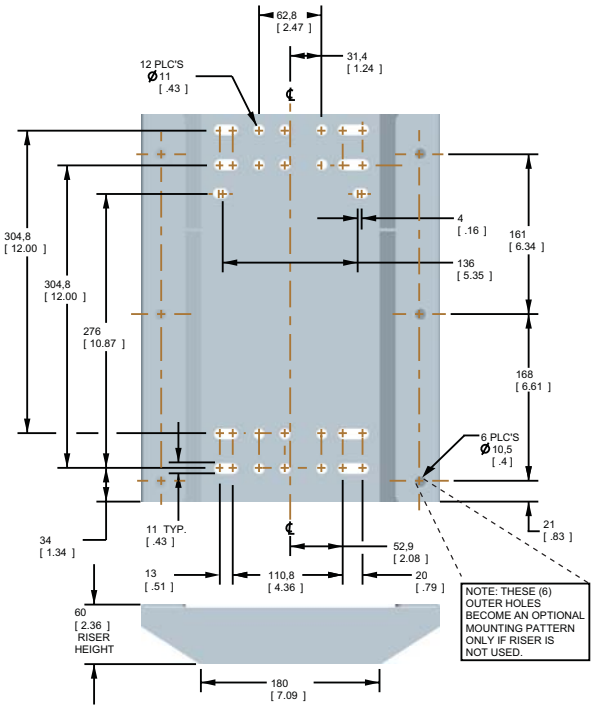
62,8
[2.47]
31,4
[1.24]
12 PLC'S
Ø 11
[.43]
304,8
[12.00]
304,8
[12.00]
276
[10.87]
4
[.16]
136
[5.35]
161
[6.34]
168
[6.61]
6 PLC'S
Ø 10,5
[.4]
21
[.83]
34
[1.34]
11 TYP.
[.43]
52,9
[2.08]
13
[.51]
110,8
[4.36]
20
[.79]
60
[2.36]
RISER
HEIGHT
180
[7.09]
NOTE: THESE (6)
OUTER HOLES
BECOME AN OPTIONAL
MOUNTING PATTERN
ONLY IF RISER IS
NOT USED.

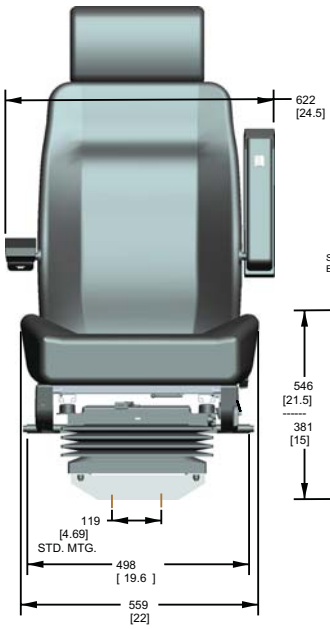
622
[24.5]
119
[4.69]
STD. MTG.
498
[19.6]
559
[22]

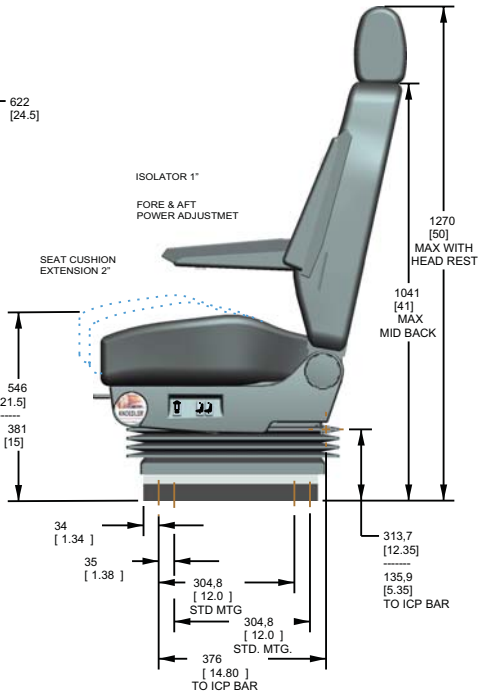
ISOLATOR 1"
FORE & AFT
POWER ADJUSTMET
SEAT CUSHION
EXTENSION 2"
1270
[50]
MAX WITH
HEAD REST
1041
[41]
MAX
MID BACK
546
[21.5]
381
[15]
34
[1.34]
35
[1.38]
304,8
[12.0]
STD MTG
304,8
[12.0]
STD. MTG.
376
[14.80]
TO ICP BAR
313,7
[12.35]
135,9
[5.35]
TO ICP BAR

FRONT ADJUSTABLE
ARMRESTS
BACKREST
ADJUSTMENT
I.C.P. FOR SEATBELT
CONNECTION
BOLSTER ADJUSTMENT
SYSTEM
HEIGHT ADJUSTMENT
FORE AND AFT
SLIDE ADJUSTMENT
ISOLATOR LOCKOUT